STANDARD TOLERANCE GRADES (ISO 286-1:1988)	
DIMENSION RANGE	IT 15
0-3	±0.20
3-6	±0.24
6-10	±0.29
10-18	±0.35
18-30	±0.42
30-50	±0.50
50-80	±0.60
80-120	±0.70
120-180	±0.80
180-250	±0.93
250-315	±1.05
315-400	±1.15
400-500	±1.25
500-630	±1.40
630-800	±1.60
800-1000	±1.80

REV	CHANGE DESCRIPTION	ZONE	EC #	DATE	APV BY
01	PRODUCTION RELEASE		HCP000354	09/22/14	BKT
02	DIM. 49.60 WAS 45.60	B4	HCP000528	12/18/14	BKT
	DIM.2X3.47 WAS 1.47 ALL AROUND	B5			
	ADDED DIM. 2X1.47	B5			
	DIM. 17.50 WAS 17.00	C7			
	DIM. 39.50 WAS 39.00	E4			

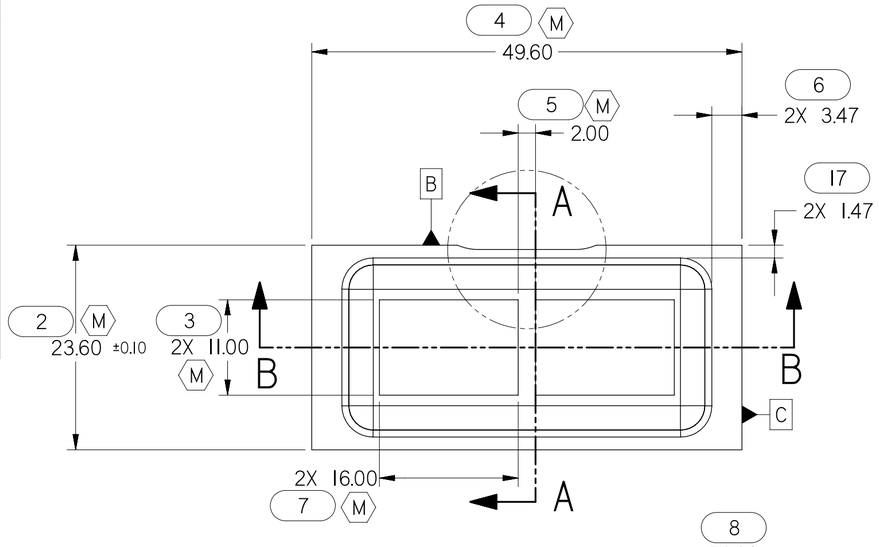

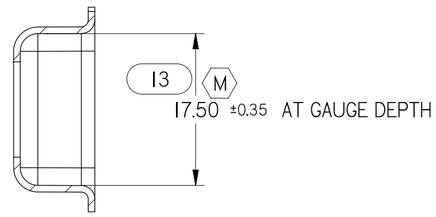

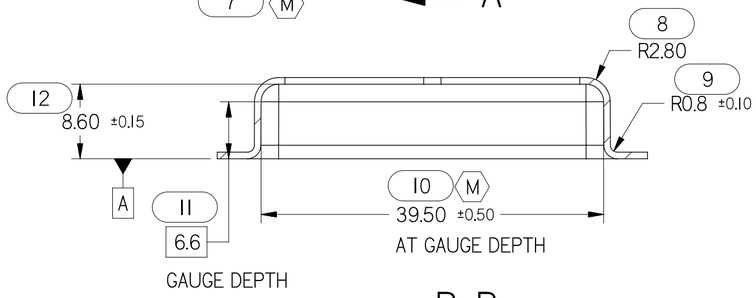

SECTION B-B

SECTION A-A

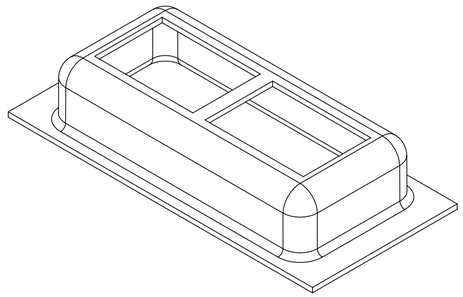

NOTES: 1

M 1. MATERIAL: 22 GAGE OR 0.76mm - ALUMINUM COATED DRAWING QUALITY SHEET STEEL, C-1008 - C-1010 TYPE 1, ASTM A463-95, T1-40 COATING DESIGNATION

2. UNLESS OTHERWISE SPECIFIED:
   - A) DRAFT ANGLES TO BE 0.5° TO 1.5°
   - B) SHARP CORNERS AND FILLETS TO BE BROKEN WITH A 0.38 TO 0.89 RADIUS
   - C) PART MUST BE FREE OF CRACKS, CHIPS, SHAVINGS AND ANY OTHER DEBRIS THAT MAY OCCUR DURING PROCESSING
   - D) USE TOLERANCE BLOCK ABOVE FOR LINEAR DIMENSION TOLERANCES
   - E) DEFAULT ANGLE TOLERANCE TO BE ±0.5°
   - F) NO BURRS OR SHARP EDGES ALLOWED AROUND THE OUTSIDE BODY OF THE STAMPING

3. FOR ALL UNDIMENSIONED GEOMETRY, REFER TO 3-D CAD FILE

4. SEE QUALITY ASSURANCE FOR ADDRESSING CRITICAL AND MAJOR DIMENSIONS

TOTAL C THIS PAGE = 0

TOTAL M THIS PAGE = 8

TOTAL INSPECTION = 17

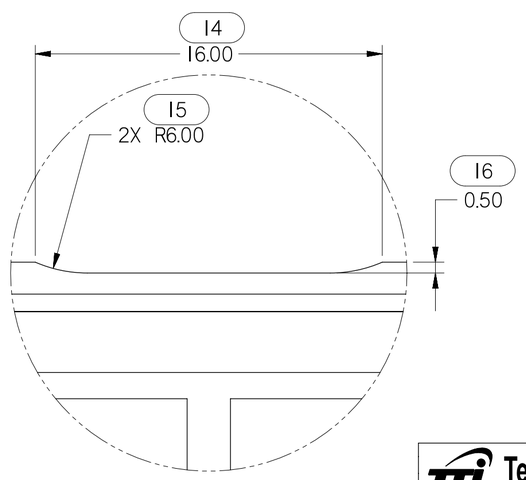

DETAIL C
SCALE 5:1

Techtronic Industries Co. Ltd.		CN ORA P/N: 638172018	METRIC UNLESS OTHERWISE SPECIFIED DIMENSIONS ARE IN MILLIMETERS	3RD ANGLE PROJECTION	
CONFIDENTIAL	DIMENSION&TOLERANCE PER ASME Y14.5 - 2009 / UNSPECIFIED DIMENSIONS REFERENCE CAD MODEL	SC SAP P/N:	PART NAME: - CAT HOLDER, TORO		
THIS DRAWING IN DESIGN AND DETAIL IS THE PROPERTY OF TECHTRONIC INDUSTRIES COMPANY LIMITED.	PART&PROCESS MUST COMPLY WITH THE COMPANY REQUIREMENTS OF HAZARDOUS SUBSTANCE FREE	DWN BY: LAE 11/20/13			
	WEIGHT: WEIGHT & TOLERANCE	APV BY:			
ALL RIGHTS OF DESIGN OR INVENTION ARE RESERVED.	COLOR: COLOR NAME, COLOR CHIP #	BU: / APV DATE:	CAD TOOL: NX / SCALE: 1 : 1 / SHEET: 1 OF 1 / SIZE: A2	PLM ID: SL00003637	REV: 02